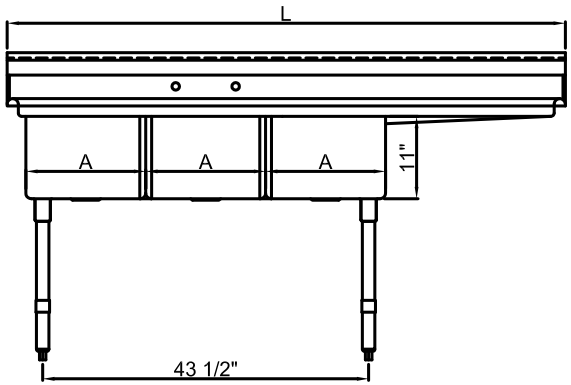

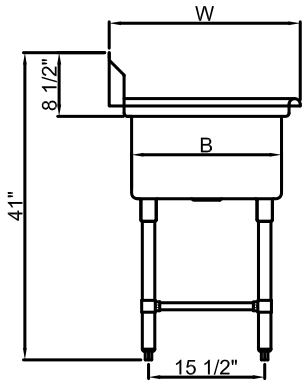

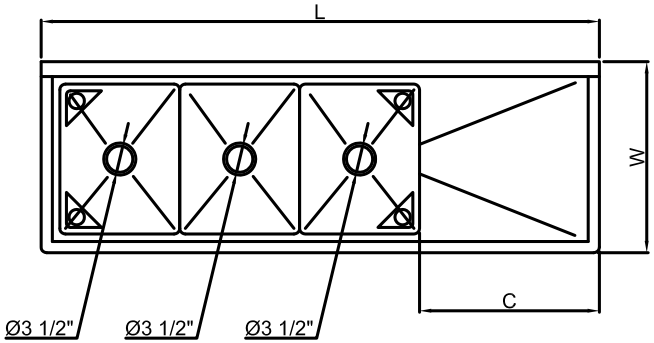

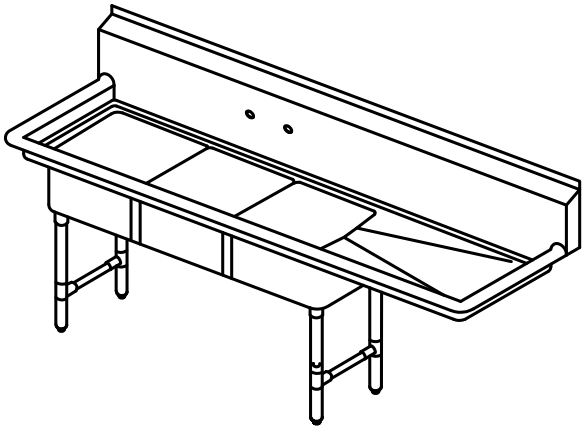

MODEL #	Length L	Length W	Bowl Size A&B	Drbrd. Length C	# of Drbrds.	Drbrds. Location	WT
ECS-3-DR24	74 1/2"	25 1/2"	16"x20"	24"	1	Right	80.6 lbs.